ECE6410 | HW03 | Brendon Simonsen

ECE 6140 HW03 | BRENDON SIMONSEN | 2016 02 05 | 1

1)

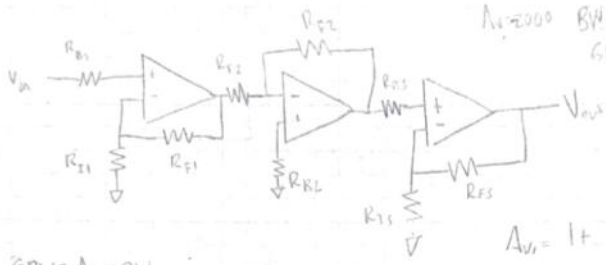

$A_V = 2000$ BW = 3MHz

GBW = 165MHz

$A_{V_1} = 1 + \frac{R_{F1}}{R_{I1}}$

$A_2 = -\frac{R_{F2}}{R_{I2}}$

$A_3 = 1 + \frac{R_{F3}}{R_{I3}}$

$GBW = A_V \cdot BW$

$A_V = \frac{GBW}{BW} = \frac{165}{3} = 55 \frac{V}{V} = 34.8 dB$

$G_{dB} = 20 \log_{10}(|A_V|)$

$A_V = 2000 = 66.02 dB$

$A_{V_1} = 34.8 = 54.95$

$A_{V_1} = 34.8 dB$ $\quad 66 - 34.8 = 31.2 dB$ $\quad \frac{31.2 dB}{2} = 15.6 dB = A_{V2} = A_{V3}$ $\quad A_{V2} = A_{V3} = 15.6 = 6.03$

$A_{V_1} = 54.95 = 1 + \frac{R_{F1}}{R_{I1}}$ FOR $R_{I1} = 1k\Omega$ $\quad 54.95 = 1 + \frac{R_{F1}}{1k} \Rightarrow R_{F1} = (54.95 - 1)1k$

$A_{V2} = \frac{-R_{F2}}{R_{I2}} \Rightarrow R_F = \frac{-A_{V2}}{R_{I1}} \Rightarrow R_F = 6.03(1k)$

$A_{V3} = 1 + \frac{R_{F3}}{R_{I3}} \Rightarrow R_{F3} = (A_{V3} - 1) R_{I3} = (6.03 - 1)1k = R_{F3} = 5.03k\Omega$

$R_{F1} = 53.95k\Omega$
$R_{I1} = 1k\Omega$
$R_{I2} = 1k\Omega$
$R_{F2} = 6.03k\Omega$
$R_{I3} = 1k\Omega$
$R_{F3} = 5.03k\Omega$

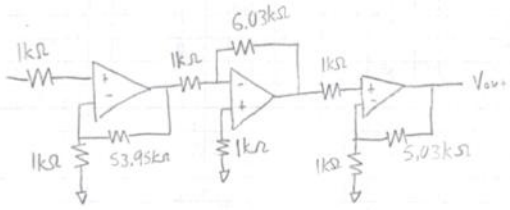

2) $A_v = 120 \frac{V}{V}$ DC $V_{out} = A_v \cdot V_{os} \Rightarrow (120 \cdot 0.150)$ $\boxed{V = 19.5V}$

$V_{os} = 150mV$

3.) $A_v = 750 \frac{V}{V}$ $V = IR \Rightarrow 10nA \cdot 15k\Omega = 150\mu V$

$R = 15k\Omega$

$I_B = 10nA$ $150\mu V \cdot 750 = 0.1125V$

$V_{os} = ?$ $\boxed{V_{os} = 112.5mV}$

4.) $-A_v = 120 \frac{V}{V}$

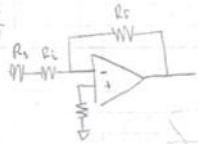

$R_s = 15k\Omega$ $A_v = -\frac{R_f}{R_i} \Rightarrow R_i = \frac{R_f}{A_v} = \frac{25k\Omega}{120\frac{V}{V}} = 208.33\Omega$

$R_f = 25k\Omega$

$R_{in} = ?$ $R_{in} = 208.33\Omega$

b) $I_B = 15nA$ $V_{os} = I \cdot R_{eq}$ $R_{eq} = R_s + R_{in} = 15.208k\Omega$ $V_{in\,os} = 15nA \cdot 15.208k\Omega$

$V_{in\,os} = 228.125\mu V$

$V_{os} = V_{in\,os} \cdot A_v = 228.125\mu V \cdot 120 = \boxed{27.4mV = V_{os}}$

ASSUME NO DC VOLTAGE FROM SENSOR

$V_{os} = I_B \cdot R_F = 15nA \cdot 25k\Omega = \boxed{0.375mV \text{ or } 375\mu V = V_{os}}$

5) $A_v = 750 \frac{V}{V}$ a) RANGE OF DC OFFSET

$R_0 = 5k\Omega$ * ASSUMING R_s RANGE IS $4k\Omega$ TO $6k\Omega$ BASED OFF OF SPAN AND R_s VALUE.

SPAN OF SENSOR $2k\Omega$

$I_B = 4.5nA$ $V_{out_offset} = A_v \cdot (V_{os} + (I_B \cdot R_s))$

$V_{os} = 12mV$

$R_s = 4k\Omega$ $V_{out_min} = 750 \cdot (12mV + (4.5nA \cdot 4k\Omega)) = 9.015V$

$R_s = 6k\Omega$ $V_{out_max} = 750 \cdot (12mV + (4.5nA \cdot 6k\Omega)) = 9.022V$

RANGE: 9.015V TO 9.022V

5) b) $V_{+\,pk} = 10V \Rightarrow \pm 8.5$ (1.5) DC OFFSET IS BETWEEN 9.005V TO 9.022 V.

THESE OFFSETS ARE ALREADY GREATER THAN THE 8.5V LIMIT

$8.5 + (-8.5) = 17V$ pk-pk. ANY INPUT SIGNAL $> 0V$ WILL CAUSE THE OUTPUT TO HIT THE RAILS, THUS CLIPPING THE OUTPUT SIGNAL

6)

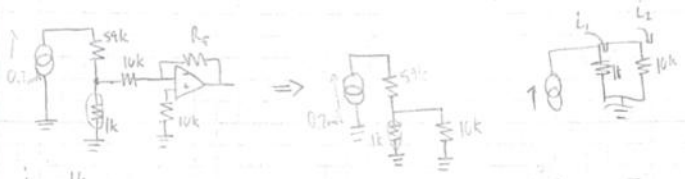

$i_2 = \frac{1k}{1k+10k}(0.2mA) = 18.2\mu A = i_2$ $\qquad \frac{18.2\mu A}{0.2mA} = 0.09$

$i_1 = \frac{10k}{1k+10k}(0.2mA) = 181.8\mu A = i_1$

FROM HW01 $R(50) = 1k\Omega \cdot e^{3200\Omega\left(\frac{1}{323.15} - \frac{1}{298.15}\right)} \Rightarrow R(50°C) = 435.9\Omega$

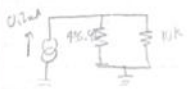

$i_{(R_L)} = \frac{10k}{10k + 435.9} I = 191.6\mu A$

$\hookrightarrow 0.9582$ $\qquad 1 - 0.9582 = 0.418 \approx 4.2\%$

a) THERE IS A 4.2% ERROR IN TEMPERATURE INTRODUCED BY THE INPUT RESISTANCE

b) THE RANGE OF ERROR WILL BE GREATEST WHEN THE RESISTANCE OF THE SENSOR IS THE LARGEST. THIS SHOULD OCCUR WHEN THE TEMPERATURE IS THE COLDEST.

7) a) $V_{out} = 5V_{in} - 5V_D$

4 INVERTERS
5 CAPACITORS

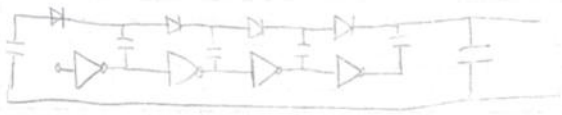

$V_D = 0.2$

$V_{in} = 1.5$

$V_{out} = 5(1.5 - 0.2) = \boxed{6.5V}$ a)

b) 3.3V LDO

$(3.3 + 0.1)V = 3.4V$ V_{LDO_min}

VOLTAGE DROP OF 100 mV

$V_{MARGIN} = V_{OUT} - V_{LDO_min} = (6.5 - 3.4)V = 3.1V$

$I_{OUT_max} = V_{MARGIN} \cdot C \cdot F$

$F = 100Hz$

$C = 0.1\mu F$

$(3.1V)(100Hz)(0.1\mu F) = \boxed{31A}$ b)

c) $(3.1V)(Hz)(0.1\mu F) = \boxed{310\mu A}$

8) $R_0 = 3.3\,K\Omega$ @ $20°C$ SENSITIVITY $100\,\frac{\Omega}{°C}$ $V_{ref} = 5V$

a) $\% Err = \left|\frac{(Expected - Actual)}{Actual}\right|$ QUARTER BRIDGE

$$V_{out} = V_{ref}\left(\frac{R_0 + \Delta R}{(R_0 + \Delta R) + R_0} - \frac{1}{2}\right)$$

$R_0 = R_0 + \Delta R$

$$V_{exp} = \frac{V_{ref}}{4}\left(\frac{\Delta R}{R_0}\right) \qquad V_{ob} = \frac{V_{ref}}{2}\left(\frac{\Delta R}{2R_0 + \Delta R}\right)$$

$$\% Err = \left|\frac{(V_{exp} - V_{ob})}{V_{out}}\right| = \left[\frac{\frac{V_{ref}}{4}\left(\frac{\Delta R}{R_0}\right) - \frac{V_{ref}}{2}\left(\frac{\Delta R}{2R_0 + \Delta R}\right)}{\frac{V_{ref}}{2}\left(\frac{\Delta R}{2R_0 + \Delta R}\right)}\right] \cdot \frac{\frac{2}{V_{ref}}\left(\frac{2R_0 + \Delta R}{\Delta R}\right)}{\frac{2}{V_{ref}}\left(\frac{2R_0 + \Delta R}{\Delta R}\right)}$$

$$\frac{1}{2}\left(\frac{2R_0 + \Delta R}{R_0}\right) - (1)(1) = \cancel{\frac{1}{2}\frac{2R_0}{R_0}} + \frac{1}{2}\frac{\Delta R}{R_0} - 1 \Rightarrow 1 + \frac{\Delta R}{2R_0} - 1 \Rightarrow \frac{\Delta R}{2R_0}$$

$$\% Err = \frac{\Delta R}{2R_0} \Rightarrow 0.15 = \frac{\Delta R}{2(3.3k)} \Rightarrow \Delta R = 990\,\Omega$$

$$V_{out} = \frac{5V}{2}\left(\frac{990}{2(3.3k) + 990}\right) = 326\,mV$$

$$= \frac{5V}{2}\left(\frac{-990}{2(3.3k) - 990}\right) = -441\,mV$$

THE VOLTAGE RANGE FOR 15% ERROR IS -441mV TO 326mV.

b)

8)

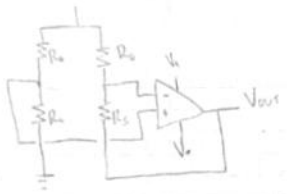

990 Ω

$\alpha = \Delta R$

$V_{out} = \frac{V}{2}(1-\alpha)$

$V_{out,pk} = 0.7 \cdot 15 = 10.5\,V$

R_x < 3.3k + 990 = 4.29k Ω
< 5.3k − 990 = 2.31k Ω

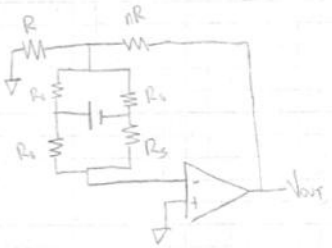

$V_{out} = 5V$

R = 1k
nR = 22.8k

WHEN $R_5 = 2.31k$, $V_{out} = 10.5\,V$
WHEN $R_5 = 4.29k$, $V_{out} = -7.76\,V$

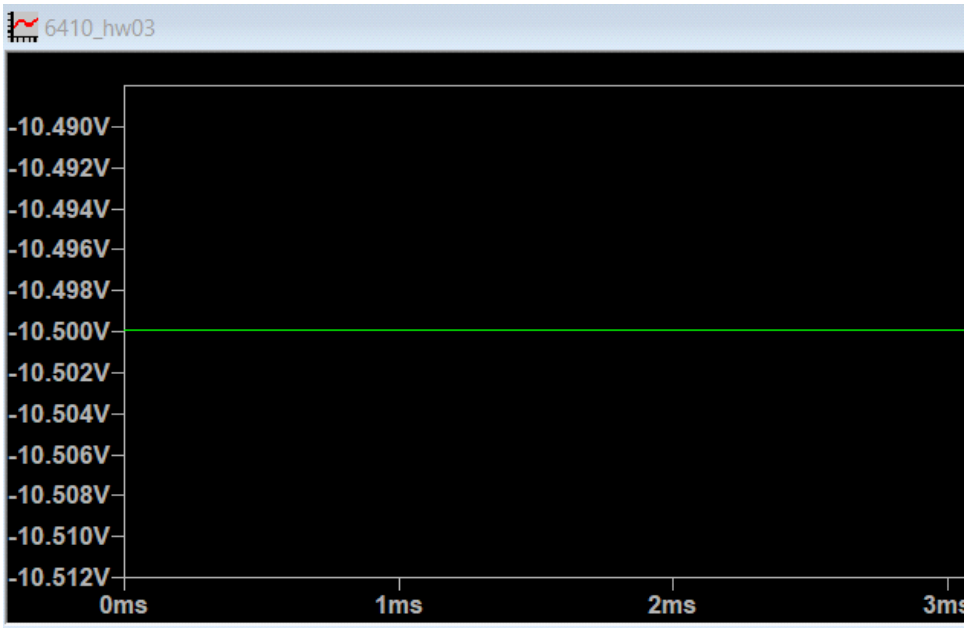
6410_hw03
-10.490V
-10.492V
-10.494V
-10.496V
-10.498V
-10.500V
-10.502V
-10.504V
-10.506V
-10.508V
-10.510V
-10.512V
0ms
1ms
2ms
3ms

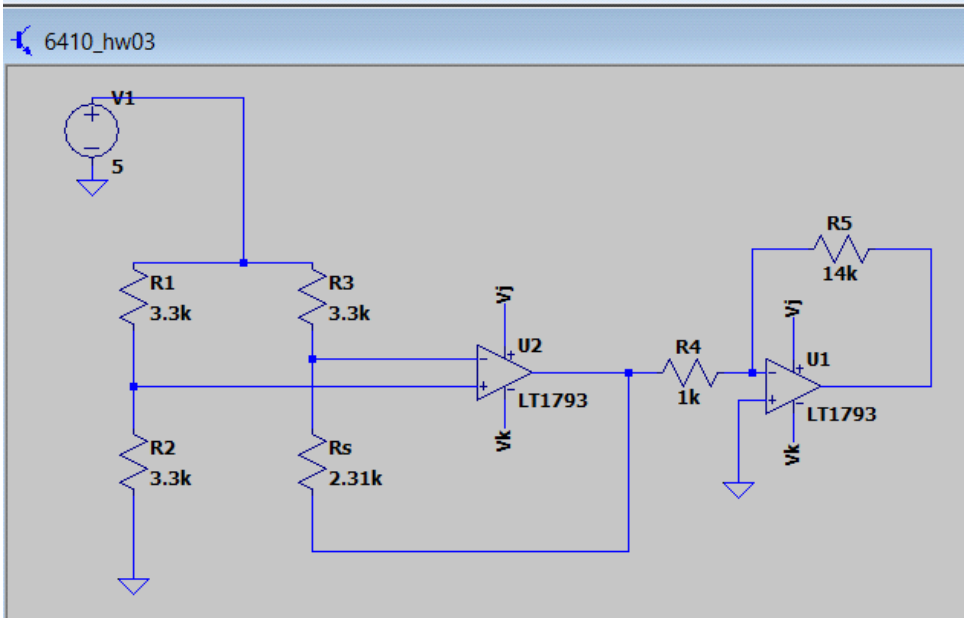
6410_hw03
V1
5
R1
3.3k
R2
3.3k
R3
3.3k
Rs
2.31k
Vj
U2
LT1793
Vk
R4
1k
R5
14k
Vj
U1
LT1793
Vk

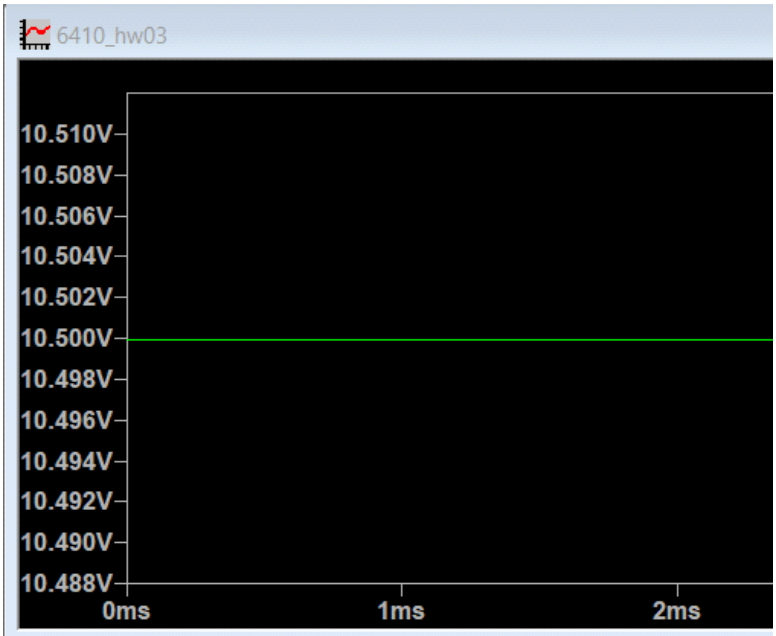
6410_hw03
10.510V
10.508V
10.506V
10.504V
10.502V
10.500V
10.498V
10.496V
10.494V
10.492V
10.490V
10.488V
0ms
1ms
2ms

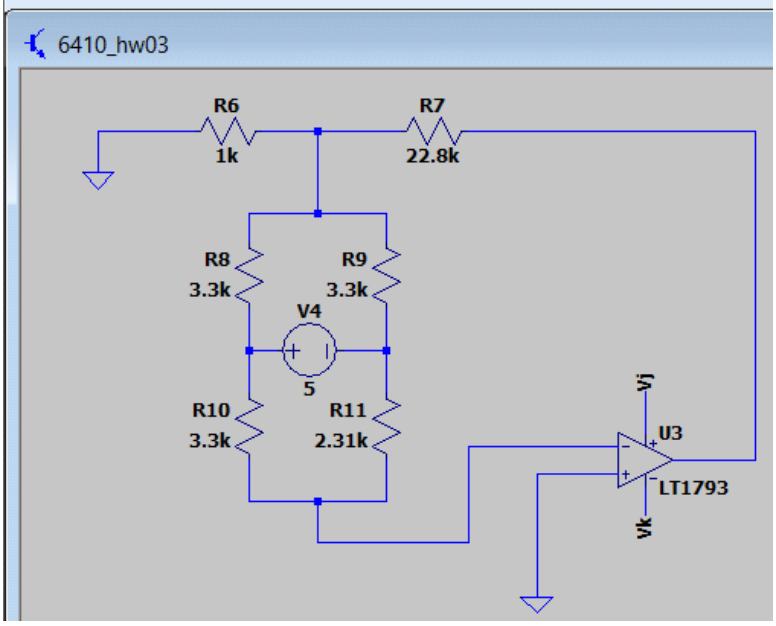
6410_hw03
R6
1k
R7
22.8k
R8
3.3k
R9
3.3k
V4
5
R10
3.3k
R11
2.31k
Vj
U3
LT1793
Vk

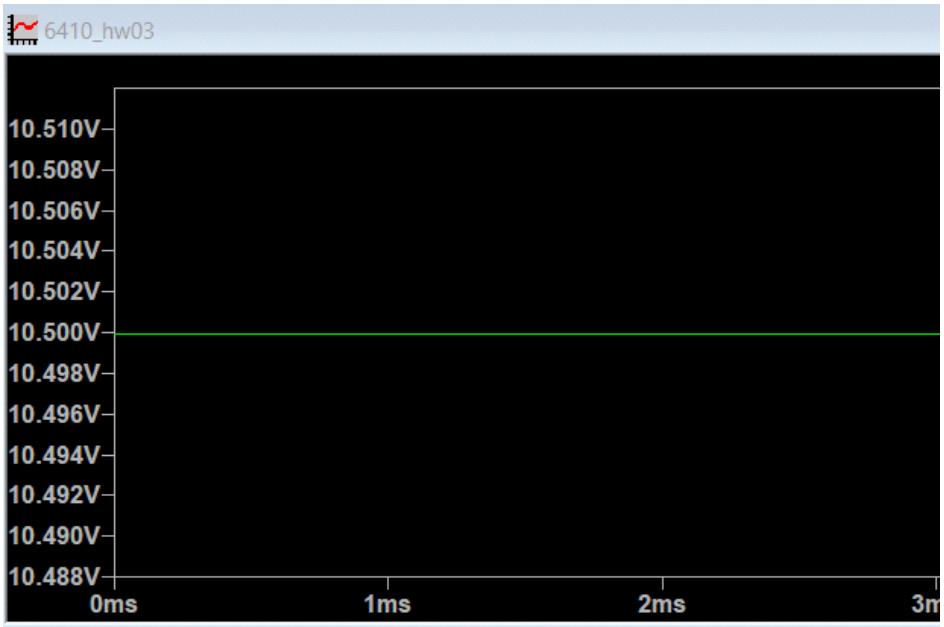
6410_hw03
10.510V
10.508V
10.506V
10.504V
10.502V
10.500V
10.498V
10.496V
10.494V
10.492V
10.490V
10.488V
0ms
1ms
2ms

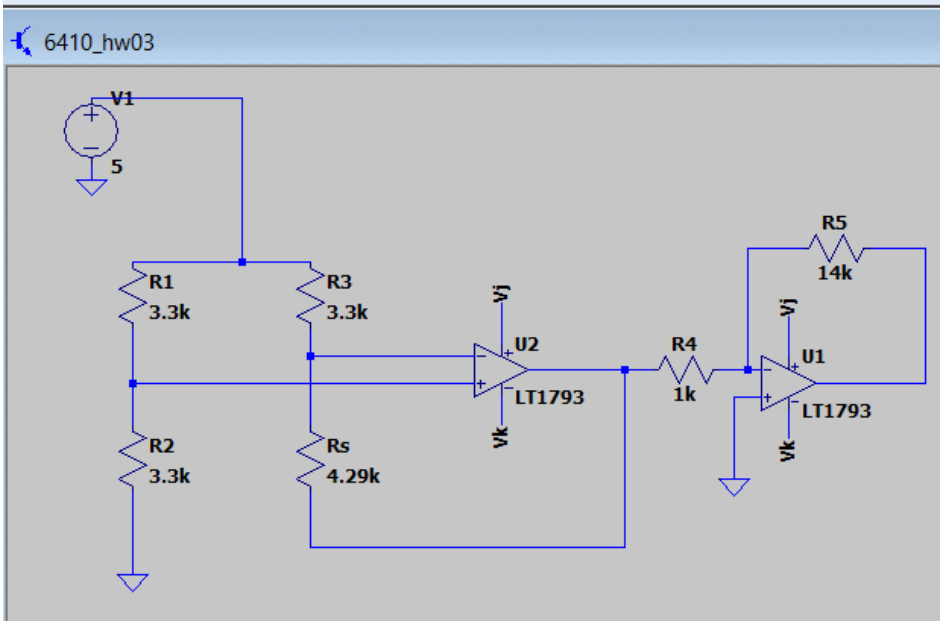
6410_hw03
V1
5
R1
3.3k
R2
3.3k
R3
3.3k
Rs
4.29k
Vj
U2
LT1793
Vk
R4
1k
R5
14k
Vj
U1
LT1793
Vk

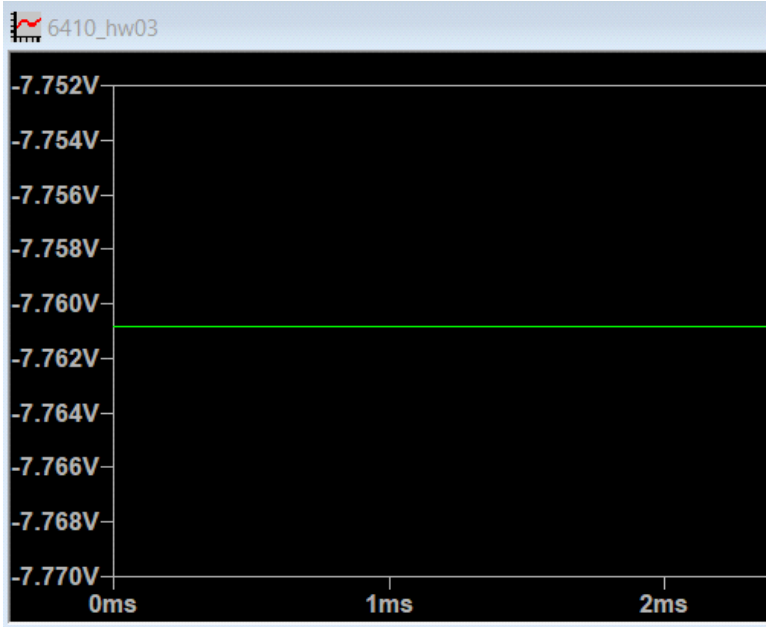

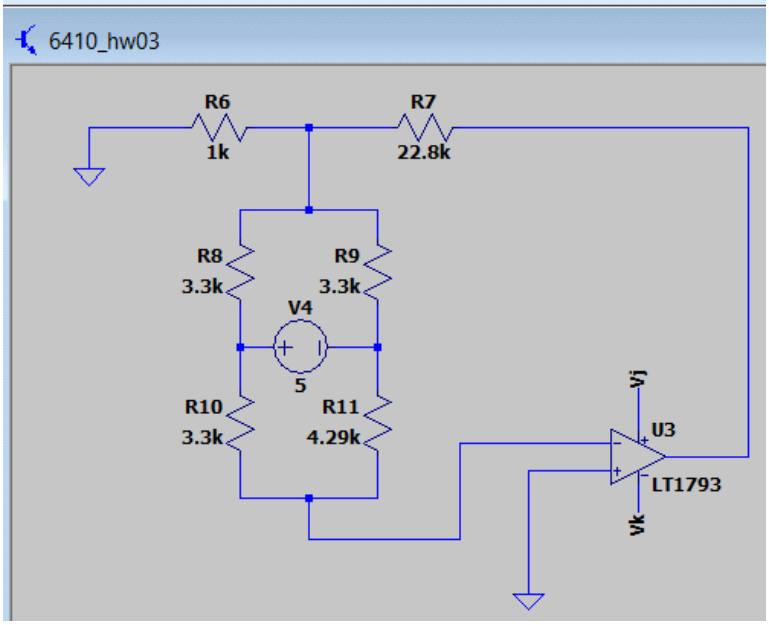

c.) I chose to use the LT1793. My reasoning for choosing this amplifier was that I am unfamiliar with amplifiers and have not used any outside of my ECE courses. In the previous homework, we were introduced to the LT1793 and the LT1363. From my research and limited understanding, I selected the LT1793 for its ability to handle high impedance values. In this homework, I was again working with resistors above 1kΩ. I know that the LT1793 worked for me in HW02 and as such decided to use it again for this problem.

I choose to build the provided a and b architectures. As you can see from the images above, architecture a is able to reach 70% OFS (10.5V) for both + and -990Ω. This 990Ω is what I calculated in part a of this problem. However, for architecture b I had to design it to only be able to reach 10.5V for the case of -990Ω. This is because the output to this bridge amplifier architecture was not symmetrical. For the case of designing a symmetrical amplifier, I would select

architecture a.
Architecture a does need a second amplifier stage to reach 10.5V, and architecture b does not. If there was some reason that space and number of components was limited, architecture b would be the better choice as only 1 op-amp needs to be used. These are the tradeoffs I identified between the two architectures.